ART. 2708

SCHEDA TECNICA - *TECHNICAL SHEET*

Art. 1107

Dimensioni (mm) - *Dimensions (mm)*

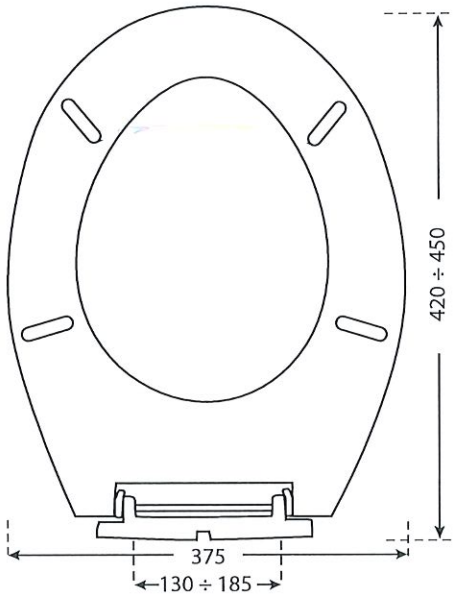

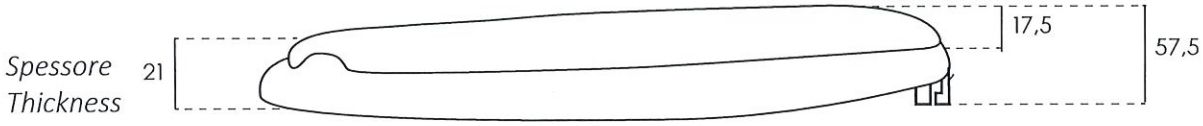

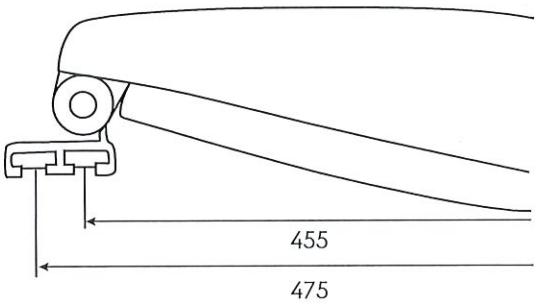

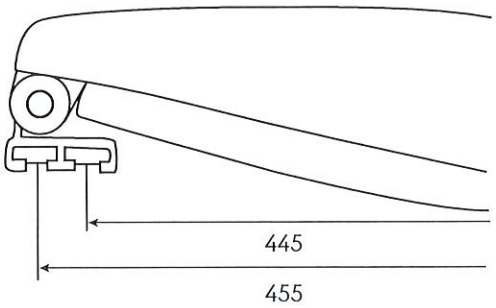

Sedile wc universale
Fissaggio rapido e sicuro
Anatomico, infrangibile, igienico, riciclabile al 100%

Universal toilet seat
Fast and safe fixing
Anatomic, unbreakable, hygienic, 100% recyclable

Caratteristiche tecniche

Materiale: resina infrangibile ABS
Peso: 1,280 Kg
Cerniera: cerniera uniblock (art. 1109) o cerniere in accio inox (art. 1109X)

Technical features

Material: unbreakable ABS resin
Weight: 1,280 Kg
Hinge: uniblock hinge (art. 1109) or stainless steel hinges (art. 1109X)

Articoli

1107 Sedile K2 EVO bianco, con cerniera uniblock regolabile

1107CH Sedile K2 EVO champagne, con cerniera uniblock regolabile

Items

1107 *White wc seat cover K2 EVO, with adjustable uniblock hinge*

1107CH *Champagne wc seat cover K2 EVO, with adjustable uniblock hinge*